# Design of Frontal Perching Mechanism to Vertical Surfaces for Flapping-Wing MAVs

Tomoyuki Matsuda, Saad Hussain, Abner Asignacion Jr., and Satoshi Suzuki*
Chiba University, Japan

ABSTRACT

In this study, a novel frontal perching mechanism that is mounted at the front of the vehicle was proposed. Inspired by the way lemurs grasp tree trunks, this design contrasts with conventional underbody mechanisms. The frontal configuration offers potential advantages in high-speed approaches and enables direct engagement with vertical targets. Load testing and flight experiments were conducted using a flapping-wing platform equipped with the proposed mechanism. The load testing revealed how the gripping performance varied depending on the surface characteristics of the object and the direction of the applied force. The results of the flight experiments demonstrated that the mechanism is capable of stable perching on vertical cylindrical structures. This study confirms the feasibility and advantages of frontal perching for FWMAVs and contributes a new perspective to perching mechanism design in aerial robotics.

## 1 INTRODUCTION

In recent years, the demand for drones has been increasing globally, with industrial applications such as aerial photography, mapping, exploration, and pesticide spraying becoming widespread [1]. These tasks are all conducted without physical contact between the drone and the environment. Recently, research on tasks involving environmental contact (e.g., pushing-pulling tasks, peg-in-hole tasks) has gained momentum. This study focuses specifically on the perching task among such applications. The Flapping-Wing Micro Aerial Vehicle (FWMAV), the subject of this study, excels in flight efficiency and safety but generally suffers from short flight endurance. To address this limitation, the perching task has gained attention as a promising solution.

For rotary-wing drones, multiple perching mechanisms have been proposed in prior research [2]. However, due to the small payload and design constraints of FWMAVs, existing perching mechanisms for this type of vehicle remain limited [3] [4]. In particular, weight reduction and the difficulty of precise grasping are regarded as major challenges.

This study proposes a frontal perching mechanism. Most existing perching mechanisms are mounted on the underside of the drone. Such configurations require precise alignment with the target object due to the significant reactive forces that occur upon contact between the mechanism and the surface. Moreover, when the center of mass is relatively high, these designs tend to be unstable against rotational disturbances, such as wind forces. In contrast, the proposed frontal perching mechanism is expected to enable high-speed perching and stable holding on vertical surfaces. Previous research introduced a UAV called the "Hugging-wing Robot," which perches by embracing vertical structures [5]. This study adapts that concept to FWMAVs and verifies its effectiveness. The authors of [5] have inspired the design of perching mechanisms that mimic how animals like geckos and flying squirrels leap onto trees and wrap around them. Similarly, this study adopts a bio-inspired design approach based on the wrapping behavior of arboreal animals, lemurs.

The remainder of this paper is organized as follows. In section 2, the design and development process of the frontal perching mechanism is presented. This includes the biological inspiration behind the concept, the parametric representation of the mechanism, and the associated mechanical considerations. The section also describes the manufacturing process, covering the material choices and structural configuration used to realize the proposed design. Section 3 presents the experimental evaluation used to assess the gripping performance of the proposed mechanism, including both the results and their interpretation.

## 2 STRUCTURE OVERVIEW

### 2.1 Drone Platform

Recent research on flapping-wing drones has primarily focused on two categories: ornithopters, which mimic birds, and entomopters, which mimic insects [6]. Among these, entomopters are particularly promising for perching applications due to their high agility and precise maneuverability during flight. Integrating a perching manipulator into such platforms is expected to significantly enhance their mission capability.

In this study, the Entomopter Nimble+ by Flapper Drones [7] was used as the experimental platform, owing to its VTOL capability and agile 6-DoF maneuverability, both of which are well suited for mid-air perching experiments. Figure 1 shows a photograph of the Nimble+, along with the motion capture deck and battery used in the experiment. The vehicle is based on the DelFly Nimble [8], a well-established entomopter platform. These features facilitate mid-air perch-

*Email address: suzuki-s@chiba-u.jp

http://www.imavs.org/

http://www.imavs.org/

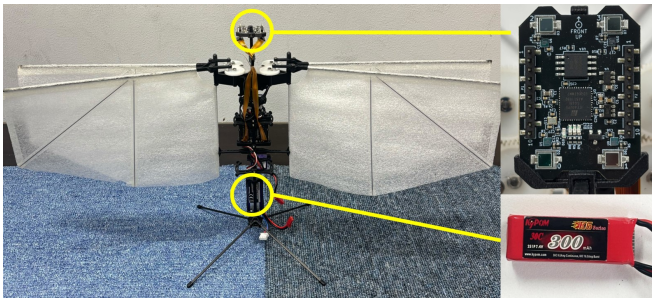

Figure 1: Entomopter "Nimble+", Lighthouse and Battery

ing experiments. The basic specifications of the Nimble+ are listed in Table 1. Like most FWMAVs, its payload capacity is limited, with 25 g recommended. However, flight is possible with up to 50 g under experimental conditions, albeit with reduced stability. This constraint presents a critical challenge for integrating perching mechanisms. Accordingly, the frontal perching mechanism was designed to be compatible with the Nimble+ and manufacturable within its payload limit.

### 2.2 *Design and Parameters*

To design the frontal perching mechanism, inspiration was drawn from the locomotion strategies of arboreal mammals that climb vertical trees. Incorporating biological insights from tree-dwelling animals into flying robot design is valuable due to their adaptive and efficient behaviors. Figure 2 compares the gripping posture and forces of a lemur grasping a vertical object with those of the proposed mechanism. As shown in the left panel of Figure 2, the lemur supports its body using two limbs above and two below the object. This limb configuration served as a reference for the design of the mechanism. Furthermore, [9] provides a detailed analysis of the weight distribution between the upper and lower limbs, highlighting how lemurs effectively support their body weight against vertical objects.

The detailed design of the frontal perching mechanism is presented in two orthographic views: the *Side View* (Figure 3) and the *Top View* (Figure 4). All performance-critical parameters are annotated in the figures and described below.

In the side view, the mechanism includes an additional

| Parameters | Values |
|---|---|
| Weight (Without Shells) | 102 g |
| Payload (Recommended) | 25 g |
| Height | 25 cm |
| Wingspan | 49 cm |
| Battery | LiPo 2S 300 mAh |
| Flight time (with 25 g payload) | 5 min |

Table 1: Specifications of the Entomopter "Nimble+"

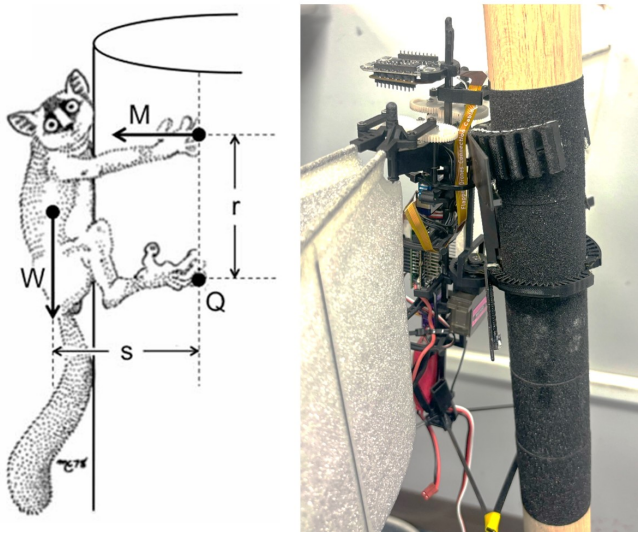


Figure 2: Lemur Grasping a Vertical Object [9] and the Proposed Frontal Perching Mechanism

non-gripping stopper located beneath the lower fingers, in contrast to the lemur-inspired configuration, which employs only four gripping limbs. This stopper is designed to resist the pitching moment generated by the vehicle. The widths of the upper and lower fingers are denoted by $t_1 = 20$ mm and $t_2 = 5$ mm, respectively, while the vertical distance between the upper and lower fingers is represented by $d_1 = 40.2$ mm and the distance between the lower fingers and the stopper is represented by $d_2 = 125$ mm. The lower fingers are arranged in a staggered parallel configuration, with an offset of 5 mm introduced between them. This design prevents interference between the fingers by maintaining parallel alignment [10]. The entire mechanism is mounted with a forward tilt of $\theta = 11.4$ deg. This inclination allows the moment induced by the weight of the vehicle to be partially supported by the stopper, reducing finger load. It also improves alignment with vertical objects during forward flight, particularly when the vehicle approaches the target in a nose-down posture typical of high-speed perching. In the top view, the upper and lower fingers appear to overlap but differ in length, denoted by $l_1 = 64.8$ mm and $l_2 = 82.2$ mm, respectively. Each finger is inclined at an angle $\phi = 30$ deg, and the lateral spacing between the left and right finger pairs is defined as $a = 11$ mm. The distance between the mechanism and the airframe, denoted as $b = 16$ mm, arises from the structural design but is ideally minimized for compact integration.

No formal parameter optimization was conducted in this study. Instead, the values were heuristically chosen to match a cylindrical object with a diameter of $D = 40$ mm. Due to the high dimensionality of the parameter space, an exhaustive search for optimal values was deemed impractical at this stage. Future work will explore numerical simulations or an-

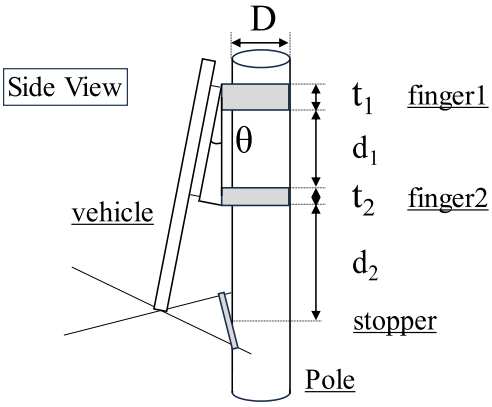


Figure 3: Side View of the Design

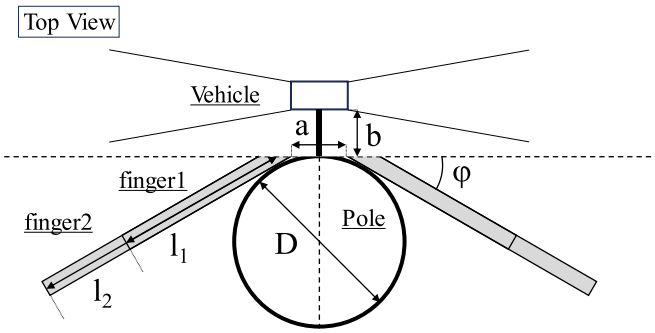


Figure 4: Top View of the Design

alytical modeling to refine the design.

The side view shown in Figure 5 illustrates the directions of the reaction forces acting on each component, as well as the positions and distances of the corresponding contact points. $c = 124$ mm represents the distance from the center of mass to the contact point of the stopper and $\alpha = 19$ deg represents the angle the stopper makes with the horizontal. Among these, $F_1$ and $F_2$ represent the reaction forces generated by the upper and lower fingers, respectively. Strictly speaking, these forces are not unidirectional as depicted. According to [9], lemurs primarily use their upper limbs to support vertical loads, while their lower limbs resist shear forces. Based on this observation, the fingers were asymmetrically designed—thicker and shorter at the top, thinner and longer at the bottom. However, in this mechanism, the center of mass is located relatively high, and therefore, the roles of the upper and lower fingers were reversed to better accommodate the shifted load distribution. This configuration is intended to efficiently distribute the moment generated by the weight of the vehicle across all contact points and enhance overall perching performance.

A simplified static analysis was conducted using the presented parameters to evaluate the equilibrium of the system. The equilibrium conditions in the horizontal and vertical directions, as well as the moment balance around the contact point of the stopper, are expressed in equations (1)–(3).

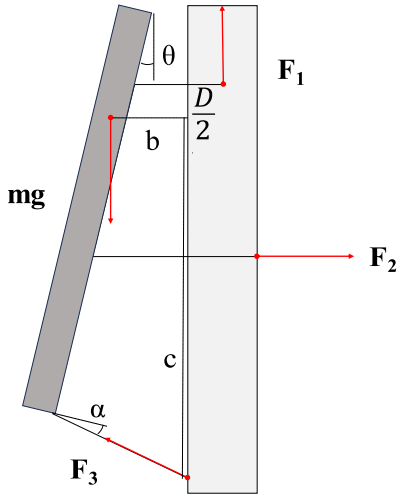


Figure 5: Force Diagram of the Side View

$$F_2 = F_3 \cos(\theta + \alpha) \tag{1}$$

$$F_1 + F_3 \sin(\theta + \alpha) = mg \tag{2}$$

$$F_1 \cdot \frac{D}{2} + mg \cdot b - F_2 \cdot d_2 = 0 \tag{3}$$

By solving these simultaneous equations, the values of $F_1$, $F_2$, and $F_3$ can be obtained as follows.

$$F_1 = \frac{2mg(d_2 - b\tan(\theta + \alpha))}{2d_2 + D\tan(\theta + \alpha)} \tag{4}$$

$$F_2 = \frac{mg(D + 2b)}{D\tan(\theta + \alpha) + 2d_2} \tag{5}$$

$$F_3 = \frac{mg(D + 2b)}{D\sin(\theta + \alpha) + 2d_2\cos(\theta + \alpha)} \tag{6}$$

Substituting the known values into the equations yields $F_1 = 1.16$ N, $F_2 = 0.30$ N, and $F_3 = 0.35$ N, respectively. These results indicate the load applied at each contact point, representing the weight distribution. In this case, the result shows that a particularly large load is applied to $F_1$.

It should be noted that these calculated forces represent the minimum values required to maintain static equilibrium. Among them, $F_3$ corresponds to a passive reaction force generated at the stopper contact point. In practical operation, if the actual gripping forces provided by $F_1$ and $F_2$ exceed their respective calculated values, the mechanism is expected to be capable of maintaining stability, even under small variations in external loading or contact conditions.

http://www.imavs.org/

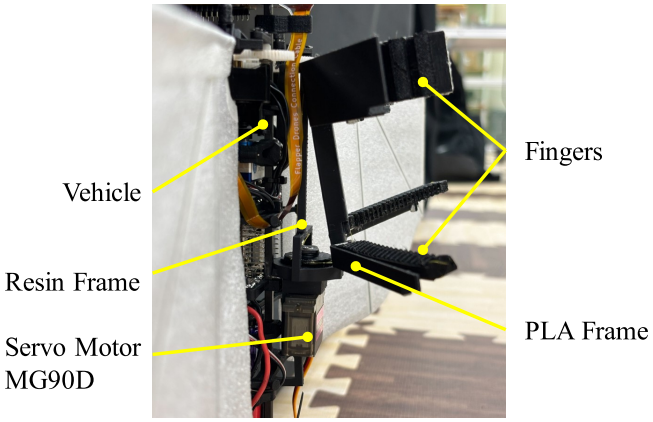


Figure 6: Attached Frontal Perching Mechanism

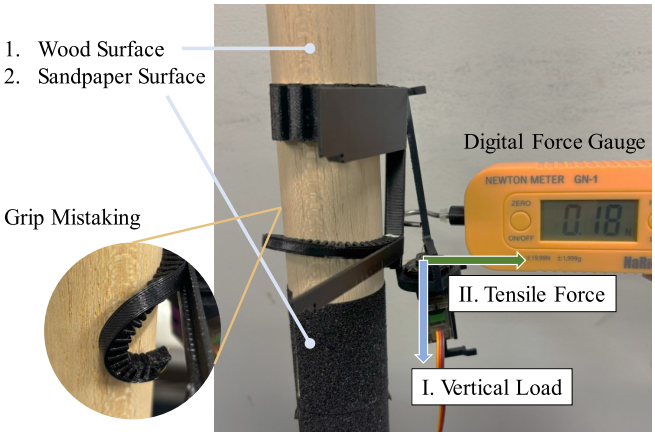


Figure 7: Experimental Setup for Load Testing

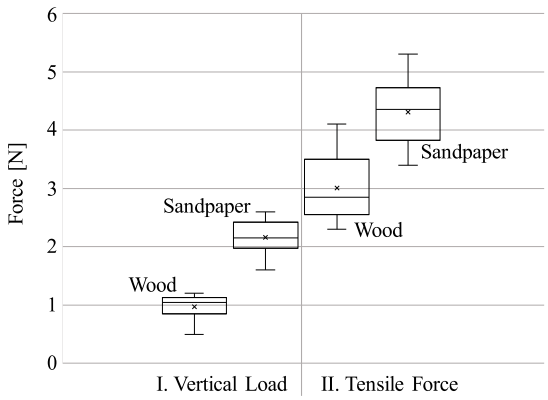


Figure 8: Load Testing Results

### 2.3 *Manufacture*

Based on the designed structure and parameters, the frontal perching mechanism was manufactured. The mechanism comprises four sections: the servo unit, resin frame, PLA frame, and finger components. Each part was manufactured separately and bonded together using adhesive.

First, the servo unit utilizes an MG90D micro servo motor. This model was selected due to its internal metal gears, which offer increased durability under the high torque loads experienced during gripping. A pulley is mounted on the servo to wind the tendon, thereby closing the fingers. Because the upper and lower fingers require different winding lengths, the pulley diameters were adjusted accordingly.

Next, the resin frame connects the mechanism to the vehicle and thus must withstand significant structural loads. To meet this requirement, the frame was printed using a stereolithography (SLA) 3D printer, which offers high material strength. Due to the angled mounting of the mechanism, the frame has a relatively complex geometry. Although SLA-printed components are generally heavier than fused deposition modeling (FDM) counterparts due to added support material, they are better suited for intricate, single-piece designs.

The PLA frame was printed using an FDM printer with hollow infill to reduce weight. It is combined with the resin frame to secure the fingers and to function as a rear support structure that absorbs impact.

The finger components were fabricated using TPU filament with an FDM printer. This soft and elastic material allows the fingers to return to their original shape when the tendon is released. They grip by tendon tension and reset by their elasticity. To enhance friction, the upper fingers were coated with silicone (Ecloflex 00-30).

All parts were bonded with adhesive and the assembled mechanism was mounted onto the vehicle using the resin frame. The adhesive used (LOCTITE 401) exhibits a tensile strength exceeding 5 MPa on resin materials, ensuring that the parts are highly unlikely to separate during operation.

The completed setup is shown in Figure 6. The total weight of the mechanism is 35 g. A PLA rod is attached to the leg of the vehicle to act as the lower stopper. As shown, the four upper fingers perform the gripping, while the stopper supports the pitching moment induced by the weight of the vehicle.

## 3 EXPERIMENTS

To evaluate the performance of the mechanism, load testing and flight experiments were conducted.

### 3.1 *Load Testing*

This experiment was conducted to evaluate the performance of the fingers under lateral and vertical loading conditions. Load testing was conducted without attaching the mechanism to the vehicle. The experimental setup is shown in Figure 7. First, the mechanism was made to grip onto either a wooden surface or a sandpaper surface. The sandpaper was bonded to the wooden stick using adhesive (LOCTITE 401). If a grip mistake occurred, as illustrated in the figure, the gripping procedure was repeated. A digital force gauge was hooked onto the mechanism and used to apply force in two directions: (I) vertically downward and (II) horizontally

http://www.imavs.org/

http://www.imavs.org/

(tensile direction). As the mechanism was pulled, the gauge reading increased until the fingers lost grip. The force at the point of release, in Newtons, was recorded by visual estimation. Each condition was tested ten times, and the results were plotted as box plots in Figure 8. Because the purpose of this test was to investigate the effects of load direction and surface material on gripping performance, factors such as pulling speed and visual estimation error were not considered.

The results shown in Figure 8 indicate that the mechanism exhibits weaker performance under vertical loads but demonstrates stronger resistance to tensile forces. This trend was consistent across both wooden and sandpaper surfaces. Additionally, greater static friction on the gripping surface was found to correspond to higher load resistance.

These findings suggest that the mechanism's vulnerability to vertical loading arises from the torque applied to the upper fingers when downward forces are exerted, causing grip failure. This interpretation is supported by the mechanical analysis in Section 2.2, which indicates that the upper finger (associated with $F_1$) bears the largest share of the total load. To improve performance under vertical loading conditions, it may be beneficial to either enhance the gripping strength of the upper fingers or revise the finger arrangement to reduce the load concentrated on $F_1$. In contrast, the strong resistance to tensile forces can be attributed to the lower fingers wrapping around the object and generating substantial opposing forces.

### 3.2 *Flight Experiments*

To further validate the mechanism, flight experiments were conducted to evaluate its ability to approach and perch on vertical surfaces during flight. The vehicle was tracked using a lighthouse positioning system, and command values were sent to guide it toward a target object. Although the Nimble+ deck is capable of integrating servo motors for perching, a separate input system was used in this experiment: gripping and release commands were issued from a laptop. To avoid damage, high-speed collision and grasping tests were not performed. Instead, the vehicle hovered near the object before executing the gripping and stopping sequence.

Figure 9 shows sequential images of the experiment. The vehicle successfully completed the sequence of takeoff, approach, hovering, gripping, and perching. While grasping failed on wooden surfaces, successful perching was achieved on sandpaper, which offers higher surface friction.

The experimental results are plotted in Figure 10. The graphs show the reference position (ref) and the actual trajectory under both PID and robust (Non-linear disturbance observer-based) control [11]. With simple PID control, tracking performance was insufficient. However, by employing a robust controller, tracking accuracy was significantly improved. This improvement coincided with the front-mounted mechanism shifting the center of mass forward and increasing total weight to 35 g, which exceeds the recommended payload for the platform.

Figure 9: Sequential Images of the Flight Experiment from Takeoff to Perching

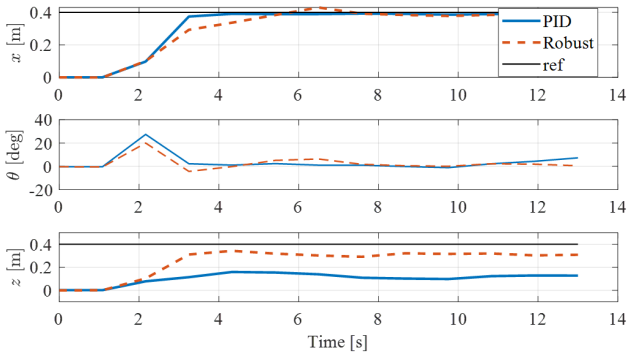


Figure 10: Time Series of Position, Pitch Angle, and Altitude during the Flight Experiment

These results confirm that the proposed frontal perching mechanism is capable of achieving stable perching during flight. Compared to underbody perching, which typically requires precise positional control due to sensitivity to rotational disturbances, the frontal configuration proved to be more tolerant of minor alignment errors and allowed easier re-takeoff.

However, achieving stable approach and gripping required the implementation of a robust controller, thereby offsetting one of the main advantages of using an entomopter—namely, its capacity for precise and responsive flight control.

http://www.imavs.org/

This limitation is likely caused by the increased weight and the forward shift in the center of gravity due to the mounted mechanism. Therefore, further improvements such as weight reduction and mass distribution optimization could enable effective flight even under simpler PID control, restoring the full benefits of entomopter dynamics.

## 4 CONCLUSION AND FUTURE WORK

In this study, we developed a novel manipulator referred to as the frontal perching mechanism for FWMAVs and successfully validated its effectiveness. By integrating a perching structure inspired by arboreal animals—capable of wrapping around vertical objects—into bird-inspired flying robots, this work opens up new avenues for perching mechanisms. The proposed mechanism combines the method of supporting vertical loads through friction (upper fingers) with the method of drawing the vehicle toward the object using strong tensile forces, enabling efficient perching on vertical structures compared to simpler claw-based or adhesive-based perching approaches. A simplified static analysis was also conducted to examine the forces acting on VTOL-type FWMAVs, identifying key design parameters critical for effective gripping performance.

For future work, the primary focus will be on reducing the weight of the system to enable stable flight using simpler controllers. More advanced flight experiments will be conducted to analyze the effects of approach speed, object shape, and surface properties on perching success. Additionally, since the current design parameters were determined heuristically, future efforts will include stress analysis and parameter optimization to enhance overall performance.

## ACKNOWLEDGEMENTS

This work was supported by JSPS KAKENHI Grant Number JP23K13274 (Grant-in-Aid for Early-Career Scientists)

## REFERENCES

[1] A. Ollero, M. Tognon, A. Suarez, D. Lee, and A. Franchi. Past, present, and future of aerial robotic manipulators. *IEEE Transactions on Robotics*, 38(1):626–645, 2022.

[2] W. R. T. Roderick, M. R. Cutkosky, and D. Lentink. Bird-inspired dynamic grasping and perching in arboreal environments. *Science Robotics*, 6(61), 2021.

[3] Krispin C. V. Broers and Sophie F. Armanini. Repeatable energy-efficient perching for flapping-wing robots using soft grippers, 2024. arXiv preprint arXiv:2409.11921.

[4] Raphael Zufferey, Jesus Tormo-Barbero, Daniel Feliu-Talegón, Saeed Rafee Nekoo, José Ángel Acosta, and Anibal Ollero. How ornithopters can perch autonomously on a branch. *Nature Communications*, 13(7713), 2022.

[5] Mohammad Askari, Michele Benciolini, Hoang-Vu Phan, William Stewart, Auke J. Ijspeert, and Dario Floreano. Crash-perching on vertical poles with a hugging-wing robot. *Nature Communications Engineering*, 3(98), 2024.

[6] Rafee Nekoo S, Rashad R, De Wagter C, and et al. A review on flapping-wing robots: Recent progress and challenges. *The International Journal of Robotics Research*, 2025.

[7] Flapper Drones. Flapper drones - bioinspired flying robots. *https://flapper-drones.eu/nimbleplus/*. July 9th, 2025.

[8] Matěj Karásek, Florian T. Muijres, Christophe De Wagter, Bart D. W. Remes, and Guido C. H. E. de Croon. A tailless aerial robotic flapper reveals that flies use torque coupling in rapid banked turns. *Science*, 361(6407):1089–1094, 2018.

[9] Laura E. Johnson, Jandy Hanna, and Daniel Schmitt. Single-limb force data for two lemur species while vertically clinging. *American Journal of Physical Anthropology*, 158(3):463–474, 2015.

[10] Askari Mohammad, Shin Won Dong, Lenherr Damian, Stewart William, and Floreano Dario. Avian-inspired claws enable robot perching or walking. *IEEE/ASME Transactions on Mechatronics*, 29(3):1856–1866, 2024.

[11] A. Asignacion, S. Hussain, T. Matsuda, and S. Suzuki. Nonlinear disturbance observer-based robust control for flapping-wing aerial manipulators. *submitted to IEEE Trans of Mechatronics*, 2025. Under review.