Adaptive frequency control strategy for the propulsion management of a long-endurance drone using hybrid power sources

T. Pavot[1,*], R. Kiefer[1,†], T. Mesbahi[1], E. Laroche[2]
[1]INSA Strasbourg, laboratoire ICube UMR7357, 24 Boulevard de la Victoire, Strasbourg, France
[2] Université de Strasbourg, laboratoire ICube UMR7357, 3-5 rue de l'université, Strasbourg, France

http://www.imavs.org/

ABSTRACT

Multi-source electric hybridization is increasingly being considered for long-endurance UAVs, offering a credible alternative to traditional internal combustion engine-powered models. By using a combination of different energy sources, such as fuel cells, supercapacitors, batteries and an energy management algorithm, hybridization optimizes the lifetime of the drone's energy sources while reducing its environmental impact..
This paper proposes an innovative frequency strategy for power management in hybrid-powered UAVs by adapting the cut-off frequency according to the state of charge of the supercapacitors, in order to protect the fuel cell and battery from flight-induced current variations. This article shows the advantages of the adaptive frequency strategy over the conventional frequency strategy found in the literature.

1 INTRODUCTION

It currently seems essential to work on decarbonized propulsion strategies to limit greenhouse gas emissions. In the field of aeronautics, the aim is to create more efficient and less polluting propulsion systems. Long-endurance UAVs provide a testing and demonstration ground for developing innovative solutions.

Hybrid systems using fuel cells and batteries offer electrical alternatives to thermal technologies in terms of endurance. Over the past ten years, the development of hydrogen-powered solutions has gained momentum as a credible alternative to fossil fuels in terms of flight autonomy. In 2009, the US Navy introduced one of the first hybrid-powered UAVs, the Ion Tiger [1], equipped with a fuel cell and battery, capable of flying for 26 hours on gaseous hydrogen and 48 hours on liquid hydrogen. More recently, in 2018, Andrew Gong achieved the first flight with passive triple hybridization, using a fuel cell (FC), supercapacitor (SC) and battery. [2].

*Email address(es): thomas.pavot@insa-strasbourg.fr
†Email address(es): renaud.kiefer@insa-strasbourg.fr

These advances testify to the growing interest in hybridization in this sector. However, the lifetime of fuel cells and batteries remains a major challenge for embedded applications.

The aim of active hybridization with supercapacitors (SC) and fuel cell (FC) is to optimize the use of each energy source to reduce wear and tear, in particular by controlling the dynamics of the currents demanded. This requires the development of high-performance energy management algorithms (EMS).[3].

The frequency strategy is a type of EMS that is highly developed in the literature. [4, 5]. The innovation proposed in this article makes the cut-off frequency variable as a function of the SC state-of-charge (SoC). To evaluate these strategies, performance indicators will be proposed.

The Stork drone (Fig1) used in this study was designed by the INSA Strasbourg team as part of the European INTERREG ELCOD project (2017-2020, www.elcod.eu). It has been specially designed to carry out long-duration flights for various missions, including the monitoring of atmospheric pollutants. The drone has a maximum take-off weight of 25 kg and a wingspan of 5 m.

Figure 1: Stork drone MK.I

The first part of the article will describe the chosen electric hybridization architecture. The second part will develop the choice of performance indicators in order to evaluate one strategy against another. The third section compares a conventional fixed-frequency energy management strategy with an adaptive-frequency strategy. Finally, we'll make a com-

http://www.imavs.org/

parative assessment of these two strategies.

2 HYBRIDIZATION ARCHITECTURE

There are different architectures for combining these energy sources. The chosen solution is the semi-active architecture [6], which uses only two converters (Fig2). It integrates three power sources for propulsion (Fuel Cell (FC),supercapacitor(SC) and batteries). These sources must be capable of supplying 500 W in cruise flight at a speed of 90 km/h, and 2000 W at peak, particularly during the take-off phase. The aim is to combine these sources with high-performance power electronics to create a hybrid propulsion system capable of responding to power peaks while maximizing the service life of the energy sources used.

By controlling these current converters, it is possible to regulate the energy supplied by each of the sources. The battery, on the other hand, is directly connected to the DC voltage bus to power the drone at start-up and provide additional power during take-off. This approach stabilizes the DC bus voltage around that of the battery, providing security in the event of DC-DC converter failure. The converters used here are limited to 500 W to meet the needs of cruising flight and for reasons of space inside the drone.

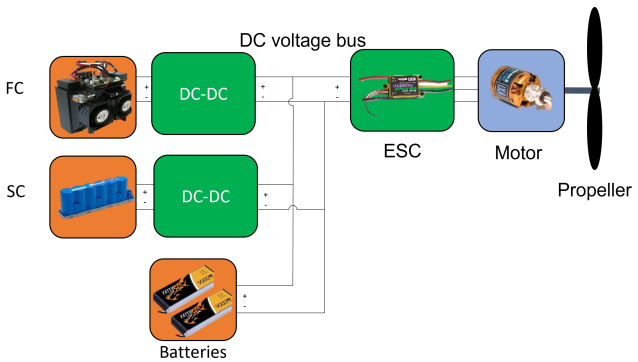

Figure 2: Semi-active architecture of the Stork drone

3 PERFORMANCE INDICATORS

To operate these converters efficiently, the EMS (Energy Management Strategy) is responsible for providing the current setpoint for the converters, to ensure that the energy mix required to meet the system's needs is achieved at all times.

In the case of UAVs, different types of EMS are available [7]. These strategies are designed to minimize or maximize one or more criteria. The choice of criteria is crucial to the evaluation of different EMS.

3.1 Typical performance indicators

For hybrid fuel cell systems, hydrogen consumption and service life are often the key criteria for comparing different EMS.

The literature often uses the hydrogen consumption criterion to evaluate EMS. However, hybrid systems combine batteries and supercapacitors with the fuel cell. Both are capable of storing energy. We therefore need to ensure that the hydrogen savings consumed do not come from discharging these sources. This criterion will not be used here, as the model used is too simplistic and does not allow us to distinguish a real difference in consumption according to current cycles.

The second criterion often used is ageing. As with hydrogen consumption, a precise model is needed to provide a reliable prediction of fuel cell lifetime.

Recent publications report on fuel cell ageing as a function of charge cycle. It appears that road cycles wear out faster than constant-current cycles. Tests have been carried out to see the impact between two cycles with different dynamics [8]. The conclusion is that the less dynamic cycle leads to slower ageing than the other. Similarly, M.Tognan's PhD thesis [9] which studies the ageing of four single-cells in a FC, two of which are directly paralleled with an SC. The effect of the SC is to smooth current calls. The results on ageing are striking. The two hybridized single cells wear less than the other two (degradation rate around 2 times lower). These results show that the reduction in current cycle dynamics on the FC has a direct impact on ageing.

However, it is difficult to evaluate these parameters accurately in simulation. The performance indicator we're going to use corresponds to the reduction in current variations demanded of the fuel cell.

3.2 Selected performance indicators

We have chosen these three indicators for our study :

- The first indicator compares the root mean square (RMS) of the current variations required from the FC over the entire current cycle. This is the indicator that quantifies the ageing of the FC [8, 9].

- The second indicator measures the SC's maximum operating range. To minimize current peaks in the FC and the battery, SC must be used to their full capacity. To respect the optimal operating range, it's essential not to go below 25% of the SC's SoC. [10]. This choice is arbitrary, but it ensures that the SC voltage doesn't drop too low (half the voltage) to limit joule losses in the converters. This means that the maximum usable SoC range is 75%. This indicator is an important limit for validating the effectiveness of the strategy.

- The third indicator concerns the amount of energy passing through the SC. This is the sum of the energy absorbed and the energy supplied by the SC. This indicator serves as a control to assess the impact of SC use over the entire flight cycle.

These three indicators will enable us to compare strategies.

3.3 Reference cycle

In order to be able to compare the strategies used, a reference current cycle was defined during a flight involving

http://www.imavs.org/

several altitude levels (100m, 150m and 200m).(Fig.3). The drone had a total mass of 16 kg and flew for 24 min without FC. To simulate the mass of the FC and its tank, the drone was weighted by 4 kg and carried a payload of around 2 kg. This flight provided data on the drone's power consumption. It was found that the current could reach up to 80 A during ascent phases, while at cruising speed, the average consumption was 16 A, i.e. around 500W. (Fig.4). This figure shows the current peaks associated with changes in altitude.

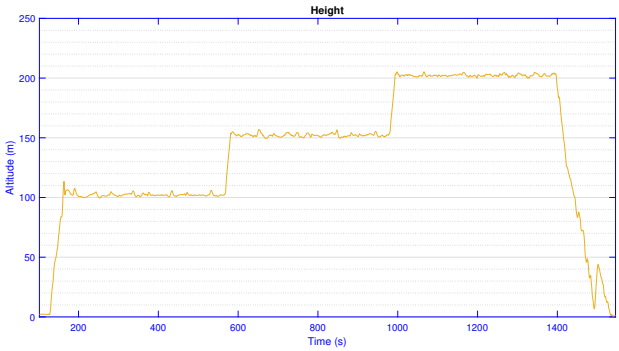

Figure 3: Altitude change during reference flight

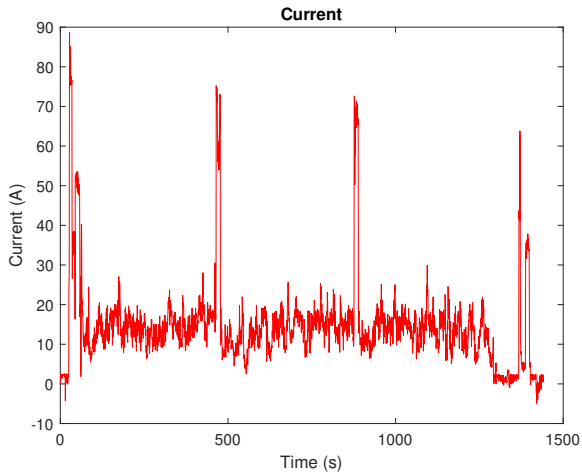

Figure 4: Power consumption during flight

This current reference cycle will be integrated into our simulation models in order to compare our different algorithms.

4 ENERGY MANAGEMENT STRATEGY

The strategies adopted here are based on the frequency strategy [4, 5]. This type of strategy reduces current variations from one source to another. On our system, this type of EMS reduces the FC wear factor.

4.1 *Fixed frequency strategy*

The frequency strategy consists of using a low-pass filter to divide the current drawn by the load into two setpoint currents for the FC and SC DC-DC converters. The FC current comprises the low frequencies, while the SC current comprises the high frequencies. This approach saves the battery and the FC during cruising flight by using the SC to supply the current variations. It is necessary to determine a suitable cut-off frequency that will limit FC current variations while respecting SC limits. However, the ideal setting will depend on the flight cycle. This setting must avoid excessively discharging or overloading the SC, while maintaining a sufficiently slow response time to minimize FC ageing.

In the following, we'll use a fixed "ideal" cutoff frequency as a reference value. This ideal frequency is obtained by applying the maximum current step that the converters can withstand. The ideal frequency limits the SC's state-of-charge (SoC) drop to 25% from an initial value of 50%. It is therefore the most dynamic fixed cut-off frequency during these steps that keeps the SC in its optimum operating range. In the case of our application, a current step of 16 A is applied. The ideal fixed cut-off frequency obtained is $FC = 0.2rad/s$.

This fixed frequency is kept as low as possible to limit the dynamics of the current required from the fuel Cell.

4.2 *SC state-of-charge (SoC) adaptive frequency strategy*

The innovation proposed here consists in adjusting the cutoff frequency according to the SoC of the SC. The general idea is to take advantage of the variation amplitude of the SC's SoC to maintain a high dynamic range, thus limiting current variations on the FC.

Depending on the operating mode of the SC (charging or discharging), the frequency law is different. When the SC is discharging, the system should be less sensitive if the SoC is low, and more sensitive if its SoC is high. The opposite is true during charging. To address this issue, we have chosen a cutoff frequency equation that follows an exponential law.

The variable-frequency strategy is based on the use of two symmetrical equations that link the SoC of the SC to the cut-off frequency. The two equations (Eq 1 and 2) used to relate the SoC to the cutoff frequency (f_c) are symmetrical exponential functions centered on an SoC of 0.5. These equations are defined on the interval [0;1]. The first equation is used for discharging the SC, while the second equation is used for charging it. The cut-off frequency chosen depends on the direction of variation of the load current in order to select the equation.

$$f_c(SoC)_{discharge} = (F_{cHlim} - F_{cLlim}) \cdot e^{-G\cdot(SoC)} + F_{cLlim} \quad (1)$$

$$f_c(SoC)_{charge} = (F_{cHlim} - F_{cLlim}) \cdot e^{-G\cdot(1-SoC)} + F_{cLlim} \quad (2)$$

The equation comprises three parameters: F_{cHlim}, F_{cLlim} and G (Tab. 1). The first two parameters are chosen to define the frequency range of the equation. The aim is

http://www.imavs.org/

to stay within the dynamic range of the slowest source, in this case the FC, and to achieve a very high dynamic range for the SC. The G parameter is also crucial (Fig5), as it determines the steepness of the exponential equation. Once the limits are defined, this parameter adjusts the sensitivity of the equation.

Table 1: Tattu LiPo Batteries

Paramètres	Valeur
F_{cHlim}	1 rad/s
F_{cLlim}	0.01 rad/s
G	3, 5 et 10

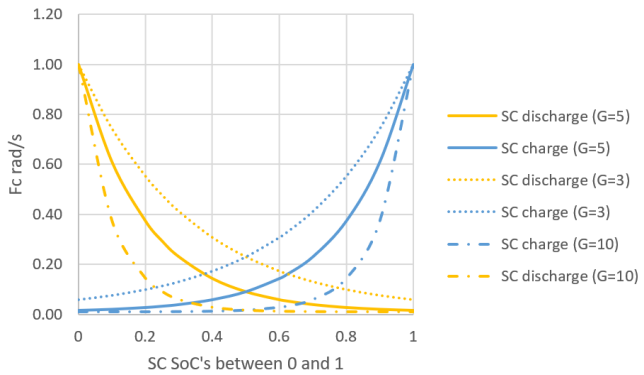

Figure 5: Representation of cut-off frequency as a function of SoC and parameter G

5 SIMULATION AND RESULTS

Modeling and simulations are carried out using Matlab Simulink software, applying the current cycle derived from real drone flight. The relevance of the simulation model of the various EMS components was validated by comparing the results with those of a test bench emulating the drone's flight in the laboratory, using the cycle defined above.

5.1 Simulation results

The results obtained (Fig 6) highlight the differences between the ideal fixed-frequency strategy of 0.2 rad/s and three strategies with adaptive cutoff frequencies, with different G parameter values (3, 5 and 10). By changing the G parameter, the sensitivity of the cut-off frequency to the SC SoC changes.

The first curve represents the current drawn by the load, which must be distributed between the three sources. The next two curves correspond to the currents coming from the FC and the SC at the output of the converters, while the last curve represents the battery current. Each of these strategies smoothes the current demanded from the FC, while leaving current variations to the SC. The battery draws current during climb phases, as the power demanded by the motor exceeds

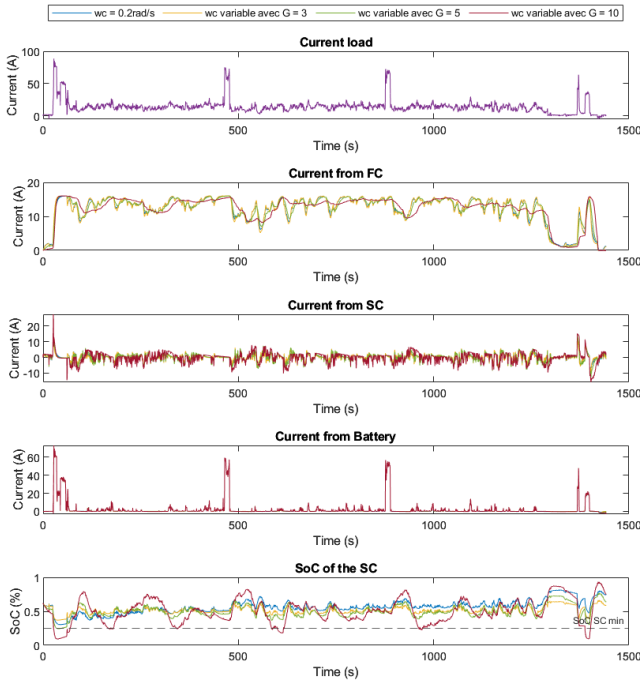

Figure 6: SC current and SoC results during the complete flight current cycle

500 W, whereas during cruise phases, the current is zero. This is due to the limitation of the converters' power to 500 W.

The last curve illustrates the evolution of the SC's SoC throughout the cycle. It is interesting to note the effect of parameter G, which increases the SC's charging and discharging amplitude as its value increases.

The choice of three values of G demonstrates the impact of sensitivity on simulation results. Value 5 is selected to illustrate the optimum result, which keeps the SC SoC above 25% throughout the cycle. The other two values allow us to observe the evolutionary trend of the G parameter around this optimum value.

The performance indicators (Fig 7) allow us to evaluate the different strategies. The strategy with G=10 in yellow is the worst performer on all three indicators. The strategy with G=3 in red appears to be the best, but results in SC discharge below 25%, exceeding the set limit. The other two curves, blue (fixed frequency) and green (variable frequency with G=5) correspond, according to our sizing protocol, to the ideal strategies for a fixed and adaptive cut-off frequency, as they approach the 25% limit without exceeding it.

It can be clearly seen that, over the whole flight, the adaptive frequency strategy in green (G = 5) improves two indicators and equals the third compared with the fixed-frequency strategy in blue. The most notable reduction was in current variation for the FC, down 31%. Energy transiting through the SC also increased by around 16%. The amplitude of the SoC remains virtually unchanged for both strategies.

http://www.imavs.org/

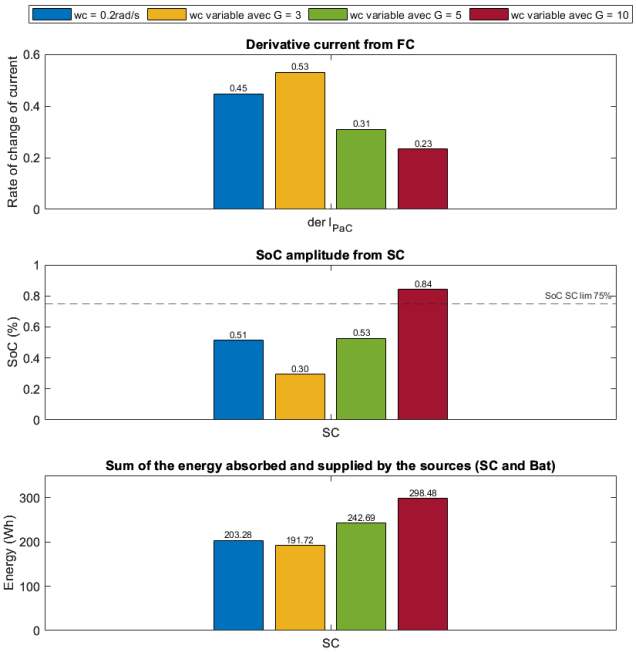

Figure 7: Performance indicators by strategy

6 DISCUSSION

The use of an adaptive frequency leads to an improvement in the indicators presented above compared with the fixed-frequency strategy. However, the best indicator should be the gain in lifetime of one strategy over another, which requires more detailed FC modeling, an aspect still little explored in the literature. An important assumption made here is that reducing current variations extends the lifetime of fuel cells. It is with this in mind that this new strategy has been developed. Utilization of the SC SoC amplitude, which remains around 50%, has not been maximized. Use of up to 75% could improve the other indicators. To apply this new strategy to any hybrid system with the same architecture, it is necessary to develop a sizing protocol to determine the three parameters of the equation. The current approach, which uses the maximum current step the system can withstand, is a first method, but it may not be optimal, especially for oversized systems. A final, more general point concerns the impact of hybridization on the lifetime versus autonomy of a single-source solution. In the case of drones, flight endurance is an essential factor. Adding this hybridization leads to an increase in mass with the addition of the two converters and the SC, which reduces autonomy. In addition, the frequency-adaptive strategy encourages maximum use of the SC, which means that as much energy as possible passes through the converters, resulting in additional losses and a reduction in overall efficiency.

In the context of today's applications, drones tend to have a relatively short lifespan compared with the energy sources that power them. This can be explained by the rapid pace of technological progress and frequent replacement cycles in the drone industry, where new, more advanced models are regularly introduced to the market.

However, when considering longer-term prospects in the aeronautics field, it becomes interesting to seek to develop aircraft with a longer lifespan. This would optimize investments in aircraft design, manufacture and maintenance, maximizing their use over an extended period.

7 CONCLUSION

This paper highlights an adaptive frequency strategy that shows promising potential for optimizing the use of SC in a hybrid system designed for a high-endurance UAV. Simulation results show that this strategy significantly reduces current variations at the fuel cell and battery terminals, and should therefore improve battery life.

Further research and experimental testing will be required to confirm this approach on test benches and in real flights.

Ultimately, this study opens up new possibilities for improving the performance and energy efficiency of long-endurance UAVs. Optimizing the use of the SC using an adaptive frequency strategy offers interesting prospects for aeronautical applications, enabling better management of current variations and more efficient use of power sources.

ACKNOWLEDGEMENTS

European INTERREG ELCOD project (2017-2020, www.elcod.eu)

REFERENCES

[1] K Swider-Lyons, J Mackrell, J Rodgers, G Page, M Schuette, and R Stroman. Hydrogen fuel cell propulsion for long endurance small UAVs. *AIAA Centennial of Naval Aviation Forum "100 Years of Achievement and Progress"*, (September), 2011.

[2] A Gong and D Verstraete. Flight Test of a Fuel-Cell / Battery / Supercapacitor Triple Hybrid. *31st Congress of the International Council of the Aeronautical Sciences*, (September):1–10, 2018.

[3] T Lei, Z Yang, Z Lin, and X Zhang. State of art on energy management strategy for hybrid-powered unmanned aerial vehicle. *Chinese Journal of Aeronautics*, 32(6):1488–1503, 2019.

[4] H Marzougui, A Kadri, M Amari, and F Bacha. Energy management of fuel cell vehicle with hybrid storage system: A frequency based distribution. pages 1853–1858, 2019.

[5] A Tani, M Camara, and B Dakyo. Energy management based on frequency approach for hybrid electric vehicle applications: Fuel-cell/lithium-battery and ultracapacitors. *IEEE Transactions on Vehicular Technology*, 61(8):3375–3386, 2012.

[6] B Wang, D Zhao, W Li, Z Wang, Y Huang, Y You, and S Becker. Current technologies and challenges of applying fuel cell hybrid propulsion systems in unmanned aerial vehicles. *Progress in Aerospace Sciences*, 116:100620, 2020.

[7] M Boukoberine, M Zia, M Benbouzid, Z Zhou, and T Donateo. Hybrid fuel cell powered drones energy management strategy improvement and hydrogen saving using real flight test data. *Energy Conversion and Management*, 236:113987, 2021.

[8] E Pahon, S Jemei, N Steiner, and D Hissel. Effect of load cycling on the performance of fuel cell stacks. *2019 IEEE Vehicle Power and Propulsion Conference, VPPC 2019 - Proceedings*, 2019.

[9] M Tognan. Etude de dégradations des performances de Piles à Combustible PEM BT alimentées en H2/O2 lors de campagnes d'endurance: du suivi de l'état de santé en opération à la modélisation du vieillissement. pages 1–190, 2018.

[10] L Mamouri, T Mesbahi, P Bartholomeus, and T Paul. Design of a DC/DC power converter for li-ion battery/supercapacitor hybrid energy storage system in electric vehicles. *2020 IEEE Vehicle Power and Propulsion Conference, VPPC 2020 - Proceedings*, (1), 2020.

http://www.imavs.org/