IMAV2017-33
https://www.imavs.org/pdf/imav.2017.33

Quick Aerodynamic Design of Micro Air Vehicles

V. Vyshinsky, A. Kislovskiy*
Moscow Institute of Physics and Technology, 140180, Gagarin street, 16, Zhukovskiy, Russia
Central Aerohydrodynamic Institute, TsAGI, 140180, Zhukovskiy street, 1, Zhukovskiy, Russia

ABSTRACT

The quick aerodynamic characteristics estimation method for preliminary design phase is presented in the paper. Simplified mathematiclal model of aircraft layout, robust and fast direct CFD code as well as artificial neural network (ANN) technique form the basis of the method. For illustration of its possibilities the proposed method was applied to micro air vehicles (MAV) design. Developed mathematical representation approximates MAV layout with 100-dimension parameter vector. The ranges of mathematical representation parameters (aspect ratio, dihedral angle and area of the wing, airfoil relative thickness, airfoil geometry etc.) were determined during existing MAV market review. The layout generator creates a number of layouts, runs CFD computations on different flight regimes. Then the information about flight regime is appended to input vector of the main algorithm. Calculated aerodynamic characteristics forms the output. Outlying layouts are filter out using geometric and aerodynamic criteria. The resulting set of vectors forms training and test sets for machine learning algorithms. For aerodynamic force and momentum coefficients calculations, the separate ANNs were created.

1 INTRODUCTION

Artificial Neural Nets (ANN) are widely used in aerodynamics and aeronautical engineering nowadays. Recent aerodynamic applications include, for example, flow control, estimation of aerodynamic coefficients, compact functional representations of aerodynamic data for rapid interpolation, grid generation,and aerodynamic design [1]. Some works showed that the preliminary design phase may be significantly simplified and accelerated with new kind of aerodynamic design tools compared with traditional approaches [2, 3, 4].

Quick estimation of MAV aerodynamic characteristics on cruise flight is significant practical problem, especially given their small-batch production, huge variety of models and wide range of their payloads.

The key suggested in the paper are robust CFD code, ANN technique and reasonable choice of layout representation (Figure 1). ANN technology requires huge amount of data for training. Creation of the layout generator is very impotant due to the lack of specific MAV data. The most important feature of the layout generator is creating objects having desired properties [5, 6].

Data generation module was divided into two parts: layout generation and CFD code that calculates aerodynamic cahracteristics (lift, drag and pitching moment).

In the first stage a mathematical representation of MAV layout was developed (which contains 100 parameters). The design process in this case is significantly simplified in comparison with traditional methods.

The flow around the MAV was calculated in the prescribed range of free stream parameters. The results of CFD calculations combined with MAV representation form the dataset.

Machine learning algorithms can be applied to generated data. A straightforward ANN was created for each aerodynamic coefficient.

2 THE LAYOUT MATHEMATICAL REPRESENTATION

Detailed description of the MAV surface used in CFD codes is impractical for machine learning tasks. To solve this problem simplified mathematical representation was created. It is divided into 4 sub-models: wing, fuselage, tail and model of their relative location. Each sub-model approximates the surface with vector of geometrical parameters. For wing representation 8 parameters are used: area, aspect ratio, taper ratio, dihedral angle, wing setting angle, leading edge sweep angle, airfoil type identifier and airfoil thickness. Some of the parameters can be fixed by the user due to his desirable application. The range of parameters is based on existing MAVs market. Table 1 demonstrates example of parameter values for wing sub-model, which were used for testing algorithm:

To get more probable layouts taper ratio and leading edge sweep angle were chosen as functions of λ. The square S_w was set equal to 3.5 m^2 and aspect ratio was defined as

$$\lambda_w = \frac{b_w^2}{S_w}$$

taper ratio is

$$\eta(\lambda_w) = A\lambda_w^2 + B\lambda_w + C$$

and leading edge sweep angle equals

$$\chi_w(\lambda_w) = D \cdot \lambda_w - F$$

*Email addresses: vyshinsky@rambler.ru, kislovskiy@phystech.edu

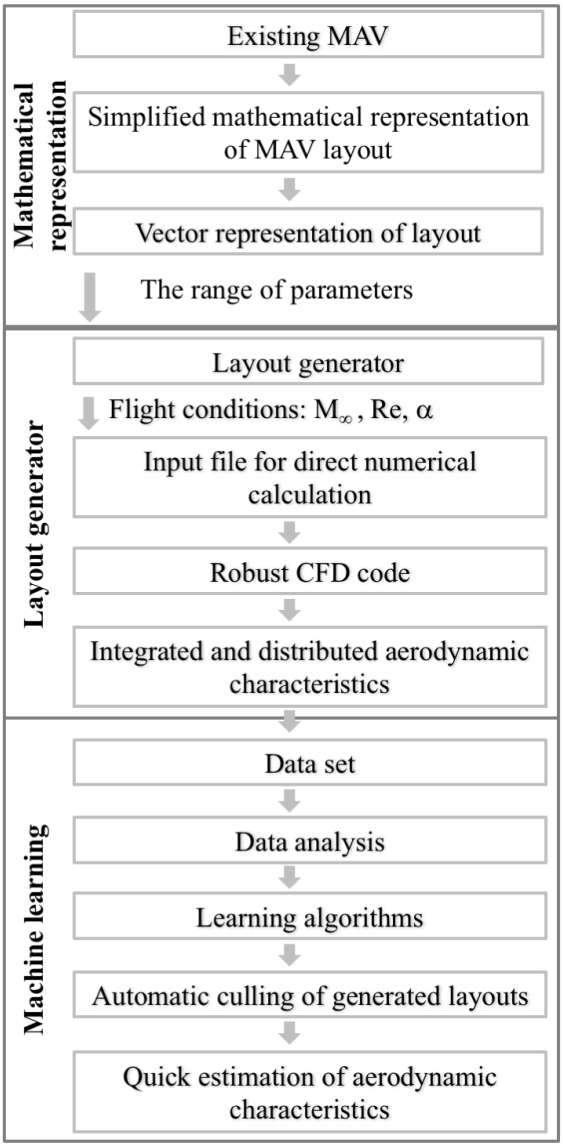

Figure 1: Key aspects of the method and logical relation of general segments

where $A = 5.33 \cdot 10^{-3}$, $B = 1.98 \cdot 10^{-1}$, $C = 2.37$, $D = 5.27 \cdot 10^{-3}$, $F = 1.9 \cdot 10^{-1}$ are empirical constants obtained from MAVs market overview.

The wing (Figure 2) is defined as follows. First wing projection on the base coordinate system is created. Then, airfoil is set in profile and 3D surface is formed. Then the wing is set on the wing setting angle. Finally, the 3D surface is changed with respect to dihedral angle Γ.

The fuselage is defined by the size of frames that separate fuselage modules (hood, nose, central and tail parts) the length and the shape of these modules. Fuselage contours functions have different analytical form for each module. Cross-section contours are described by parametrical equation

$$(\frac{2z}{h_f(x)})^2 + (\frac{2|y|}{d_f(x)})^{2+\epsilon} = 1,$$

where x is coordinate along the fuselage, $h_f(x)$ - the height of the frame, $d_f(x)$ - the width of the frame, $\epsilon \in [0, 0.5]$ - form parameter.

Table 2 shows fuselage parameters applyed for its representation, where L_w is a wingspan, c_w is a root wing chord, ϕ is a wing setting angle. The numbers in value colomn describe the possible range of changes for each parameter.

Using the same algorithm of the wing definition tail unit parts are created. Vertical tail unit (Figure 4) described by the airfoil and 4 parameters given in Table 3.

As the vertical tail unit, horizontal tail unit (Figure 5) is described by airfoil and 4 parameters given in the table 4.

The relative area of the tail unit is considered relative to the wing area.

	Parameter	Value
1	Square	3.5 m^2
2	Aspect ratio	5 - 20
3	Taper ratio	1 - 6
4	Dihedral angle V	$0° - 4°$
5	Wing setting angle	$0° - 3°$
6	Leading edge sweep angle	$0° - 1°$
7	Airfoil type identifier	1 -551
8	Airfoil thickness	0.11 - 0.18

Table 1: Wing sub-model parameters and its limitations

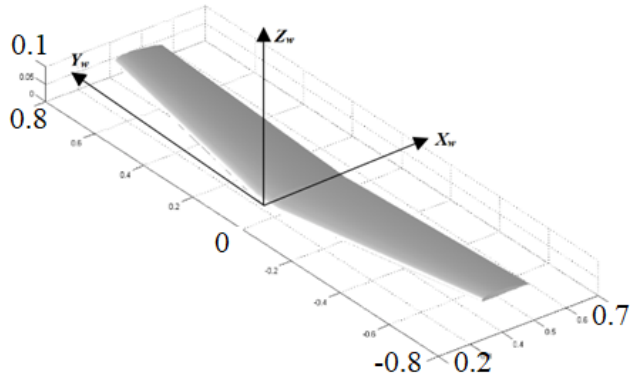

Figure 2: The general 3 dimensional view of swept tapered wing (dimension in meters)

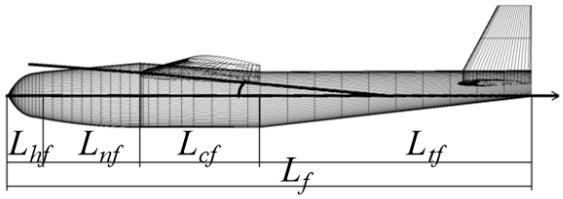

Figure 3: The side view of the fuselage with segmentations on general parts

	Parameter	Value
1	Second frame width	$(0.04 - 0.23)\frac{L_w}{2}$
2	Second frame high (H_{F2})	$(0.04 - 0.1)\frac{L_w}{2}$
3	Second frame down shift	$(0 - 0.2)H_{F2}$
4	First frame high (H_{F1})	$(0.6 - 1)H_{F2}$
5	First frame width	$(0.6 - 1)H_{F1}$
6	Middle part length (L_M)	$c_w \cos(\phi)$
7	Nose part length	$(0 - 3.5)L_M$
8	Third frame high (H_{F3})	$(0.3 - 1)H_{F2}$
9	Third frame width	$(0.3 - 1)H_{F2}$
10	Third frame down shift	$(0 - 0.2)H_{F2}$
11	Tail fuselage part length	$(0 - 4)L_M$
12	Tail fuselage part shift	$(-0.4 - 0.2)H_{F2}$
13	Fuselage back edge high (H_{tip})	$(0.1 - 0.5)H_{F2}$
14	Fuselage back edge width	$(0 - 0.5)H_{tip}$
15	Fuselage form parameter	0 - 0.5
16	Hood length	0.06

Table 2: Fuselage sub-model parameters and its limitations

Each sub-model is a variaty of points created in its own coordinate system. The sub-model of relative parts location aggregates sub-models into one base coordinate system of the MAV (Figure 6) using parallel transfer procedure for each dot.

3 Layout Generator

As far as the mathematical representation which transforms the surface (long vector) into short vector of parameters is constructed, its possible to create an algorithm wich will transform the short vector and new layouts will appear.

The layout generator randomly changes unfixed representation parameters in the limited range. Firstly, 25 layouts were used to set the constraints. The procedure above increased its number to 8659. CFD input file is created for

	Parameter	Value
1	Aria	$0.02 - 0.04$
2	Aspect ratio	$1.2 - 1.7$
3	Taper ratio	$0.3 - 0.65$
4	Airfoil thickness	$0.09 - 0.12$

Table 3: Vertical tail unit sub-model parameters and its limitations

	Parameter	Value
1	Aria	$0.03 - 0.16$
2	Aspect ratio	$3 - 5$
3	Taper ratio	$0.5 - 0.8$
4	Airfoil thickness	$0.09 - 0.12$

Table 4: Horizontal tail unit sub-model parameters and its limitations

each layout and numerical experiment is sturted in order to determine the aerodynamic characteristics. These calculations have been made using BLWF CFD-code [7] where a boundary-value problem for full velocity potential equation is solved. Viscosity is taken into account in the boundary layer approximation with fixed position of the laminar-turbulent transition. Generated layouts are presented in Figure 7. In this example all calculations were done on one flight regime. The results of computations for drag, lift coefficients and pitching moment are given in Figure 8. Each point in the graph is separate layout.

4 Artificial Neural Nets Technique for the Troblem Considered

Before the creation of the ANN the learning task should be formulated in a correct way. A computer program is said to learn from experience **E** with respect to some class of tasks **T** and performance measure **P**, if its performance at tasks in **T**, as measured by **P**, improves with experience **E** [8]. For quick estimation of aerodynamic characteristics **E**, **T** and **P** are defined as followes:

Task **T**: the prediction of aerodynamic coefficients;

Performance measure **P**: cost function (squared difference between the output of a neural network and calculated coefficient);

Training experience **E**: learning on dataset calculated by CFD codes.

The process of creation of the ANN consists of 8 basic steps:

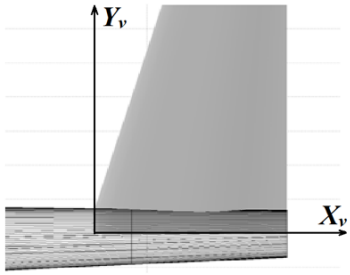

Figure 4: The side view of vertical tail unit with local coordinate system

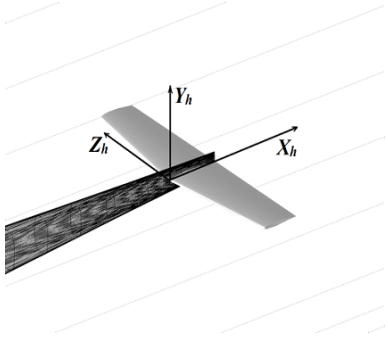

Figure 5: 3 dimensional view of the horizontal tail unit with local coordinate system

1 Collection of data for training
2 Data preparation and normalization
3 Network topology selection
4 Experimental selection of network characteristics
5 Experimental selection of training parameters
6 Training
7 Check the adequacy of training
8 Adjustment of parameters, final training

Steps 1,2 are related to data which must be presented in one vectorized form and satisfy problem statement. Both requirements were fulfilled automatically in the layout generator created with respect to it. All data were divided into 3 sets: training set - 4800 patterns (60%), validation set - 1600 patterns (20%) and test set - 1600 patterns (20%). Validation vectors are used to stop training early if the network performance on the validation vectors fails to improve or remains the same. For quick estimation of the aerodynamic characteristics direct feedforward ANN was created (step 3). The network has the following characteristics (step 4). Input layer has 100 neurons, hidden layer has 10 and output layer - 1 neuron. For each aerodynamic coefficient, separate ANN was trained. In step 5 sigmoid function was used as activation function. Neural net was trained using Lavenberg-Merquardt

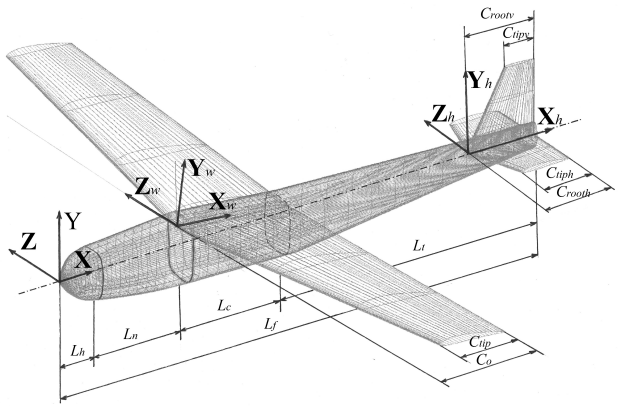

Figure 6: General view of the total MAV layout into base coordinate system

method which adaptively varies the parameter updates between the gradient descent update and the Gauss-Newton updates [9, 10]. In the gradient descent method, the sum of the squared errors is reduced by updating the parameters in the steepest-descent direction. In the Gauss-Newton method, the sum of the squared errors is reduced by assuming the least squares function is locally quadratic, and finding the minimum of the quadratic. The Levenberg-Marquardt method acts more like a gradient-descent method when the parameters are far from their optimal value, and acts more like the Gauss-Newton method when the parameters are close to their optimal value. This makes this algorithm the most widely used optimization algorithm for wide variety of problems.

The following results are given for the lift coefficient. Figure 9 demonstrates the error as a function of epoch. Training stops when network performance fails for 60 epochs in a row as shown in Figure 10. An epoch is a measure of the number of times all of the training vectors are used once to update the weights. Graphs in Figure 10 demonstrate the values of gradient, parameter mu related to Levenberg-Marquardt method and number of validation fails through the training process.

To carry out the adequacy of training 1000 new patterns were used. For each item the error was calculated which is absolute value of difference between the neural net output and the result obtained by direct calculation. The histogram shown in Figure 11 demonstrates the distribution of errors.

Performance of neural net could be estimated in a different more visible way. Figure 12 demonstrates the results of ANN lift coefficient approximation (vertical axis) versus CFD results (horizontal axis). When ANN output is equal to CFD calculation the points in the graph form a straight line.

Changing ANN parameters (step 8) it is possible to improve its performance.

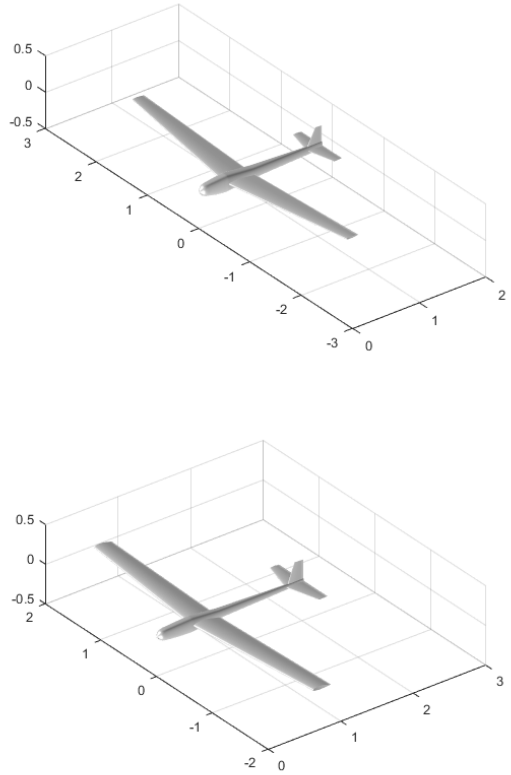

Figure 7: The examples of Generated MAV layouts. 3 dimensional view (dimensions in meters)

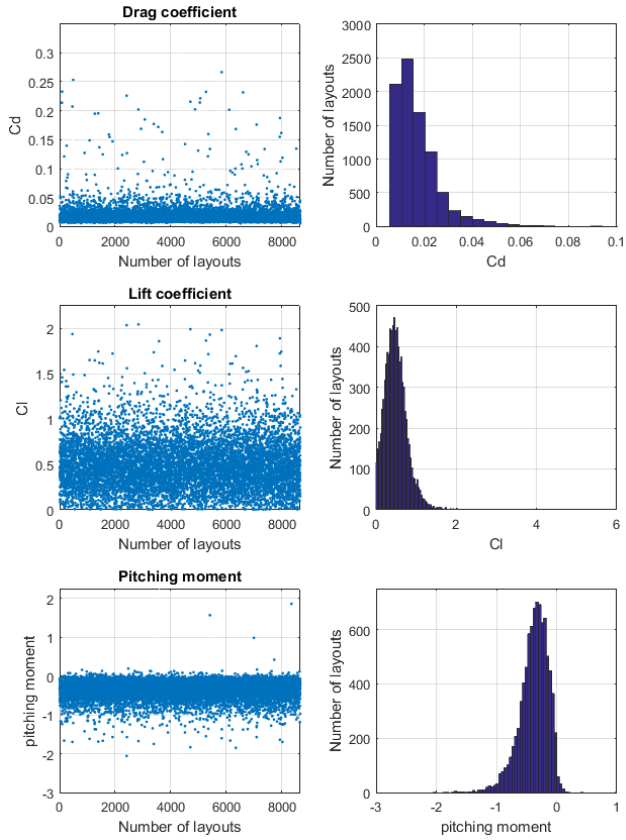

Figure 8: Drag, lift and pitching moment coefficients of the 8659 layouts generated in automation mode after culling

5 Conclusion

The algorithm developed can be applied to experimental database with real viscosity and separation effects. Proposed approach allows not only to estimate the aerodynamic coefficients of MAV but also accumulate the experience, obtained from different sources (calculations, flight and wind tunnel tests etc.), during design process. It could be implicitly reused in development of similar MAVs series. Following algorithm realization in software make it possible to solve problems of comparative analysis of the layout aerodynamic perfection and aerodynamic drag minimization.

Computational algorithms solve boundary value problems for which the correctness (existence and uniqueness of the solution, continuity dependence on boundary conditions), as a rule, is not proved. Consequently, the question of the methods accuracy remains open. In practice, the problem is solved by comparing the calculations with existing physical experiment, the data obtained with other methods and by comparison with few exact solutions. Thus, there are no rigorous general estimates of determination of integral or distributed characteristics accuracy for specific methods. Accuracy of the solutions exists only for specific types and density

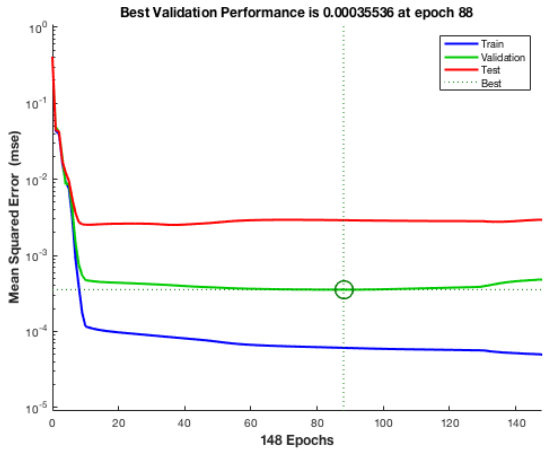

Figure 9: The process of ANN training (mean square error versus epoch)

of grids and specified parameters of the numerical scheme. In this case, the application of artificial neural networks as a universal approximator of the vehicle aerodynamic charac-

IMAV2017-33
https://www.imavs.org/pdf/imav.2017.33

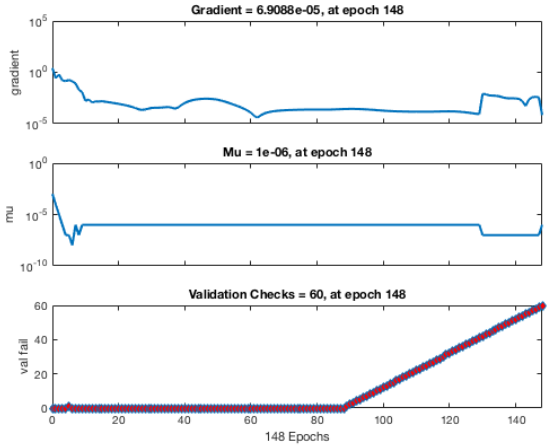

Figure 10: Training control parameters related to Levenberg-Marquardt algorithm

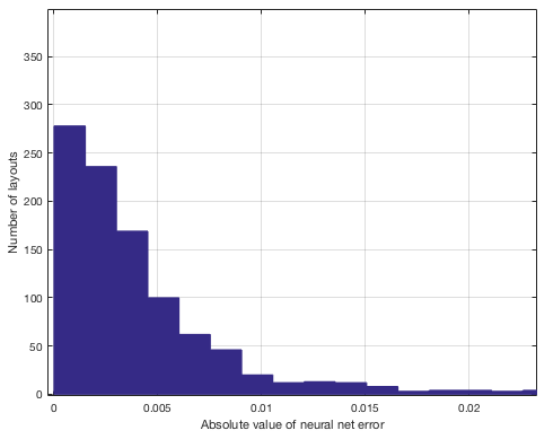

Figure 11: The error distribution on additional set (1000 items) for lift coefficient (The number of layouts versus absolute value of neural net error)

teristics provides additional advantages, mainly because it is possible to use heterogeneous data for its training.

References

[1] N. K. Madavan' M. M. Rai. Aerodynamic design using neural networks. *AIAA*, pages 1674–1691, 1998.

[2] P E. Rubbert. CFD and the changing world of airplane design. *Proceedings of the 19-th Congress of ICAS*, 1994.

[3] V.V. Vyshinsky Ye. A. Dorofeev, Yu. N. Sviridenko. CFD and the changing world of airplane design. *Proceedings of the 27th Congress of ICAS*, 2010.

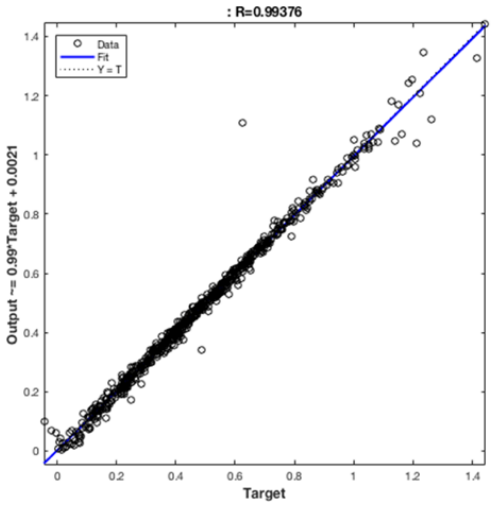

Figure 12: The ANN performance (neural net outputs versus the targets obtained from CFD calculations). If error is zero the points in the graph form a straight line.

[4] Yu.N. Sviridenko V.V. Vyshinsky A.V. Bernstein, A.P. Kouleshov. Fast aerodynamic model for design technology. *Proceedings of West-East High Speed Flow Field Conference, Moscow, Russia*, page 12, November 2007.

[5] A. O. Kislovskiy V. V. Vyshinsky. Simplified mathematical model of small sized unmanned aircraft vehicle layout. *Civil Aviation High TECHNOLOGIES*, 19(6):86–94, 2016.

[6] A. O. Kislovskiy V. V. Vyshinsky. Layout generator of small sized unmanned aerial vehicle. *Civil Aviation High TECHNOLOGIES*, 19(6):95–101, 2016.

[7] O.V. Karas V.E. Kovalev. Calcul de lecoulement transsonique autour dune configuration aile-plus- fuselage compte tenu des effects visqueux et dune region decollee mince. *La Recherche. Aerospatiale*, (1):23–38, 1994.

[8] Tom M. Mithcell. *Machine Learning*. McGraw-Hill Science/Engineering/Math, 1997.

[9] Henri Gavin. The levenberg-marquardt method for nonlinear least squares curve-fitting problems, 2011.

[10] A. Ranganathan. The levenberg-marquardt algorithm. *Tutoral on LM algorithm*, 11(1):101–110, 2004.