http://www.imavs.org/

Swarm Exploration of Unknown Areas on Mars Using SLAM

Johanna Matthaei*, Thomas Krüger*, Stefan Nowak* and Ulf Bestmann*

* Institute of Flight Guidance,
Technische Universität Braunschweig
(j.matthaei, th.krueger, stefan.nowak, u.bestmann)@tu-braunschweig.de

Abstract

This work includes a concept for the exploration of Valles Marineris, a wide canyon system on planet Mars. On account of the rough terrain, consisting of caves and mountains, a swarm of different robots is advantageous. In this case two types of robots are utilized: Unmanned Aerial Vehicles (UAVs) and Unmanned Ground Vehicles (UGVs). Due to the distance from Earth to Mars a remotely controlled operation of UAVs is not possible. The target of the project is the development of a robust fault-tolerant system of navigation and the realization of automatic operations. For the environmental detection and mapping laser scanners and a Simultaneous Localization and Mapping (SLAM) concept is used.

1 Introduction

Several exploration of the Mars were realised with manually controlled rovers in accessible environment. But especially areas with a rough surface like deep canyons are interesting for the search of water and of extra-terrestrial life. One possibility to explore this terrain is the dangerous and expensive investigation by a manned crew. From the view of technologies perspective this is not yet possible. Another solution are automatic acting robots with a fault-tolerant system of navigation. In this concept two types of unmanned vehicles are used. UAVs and UGVs explore the unknown area as cooperative acting swarm, as depicted in Figure 1.

The Martian scenario has the disadvantage of a dead time between 6 and 60 minutes for radio transmission between Earth and Mars. Therefore a manual control is only possible for slow moving vehicles. So automatic acting is necessary for an adequate speed of exploration and for the control of flying vehicles. A safe exploration of unknown areas also requires an environmental detection and robust navigation, besides routines for automatic operations. Therefore a rover needs information about its states, surrounding terrain and the relative position to other swarm members. A precise navigation is practicable by the combination of self-positioning and relative positioning systems. At this point a comprehensive Simultaneous Localisation and Mapping (SLAM) algorithm is suitable to realise a relative positioning.

1.1 Martian Environment

Especially for UAVs the physical and environmental properties of Mars have to be considered during development. Some relevant parameters are the rotational velocity of Mars with $\omega_{Mars} = 14.62\ \frac{\circ}{s}$ and the gravity with $g_{0,Mars} = 3.71\ \frac{m}{s^2}$. The Inertial Navigation System (INS) has to be adapted to

http://www.imavs.org/

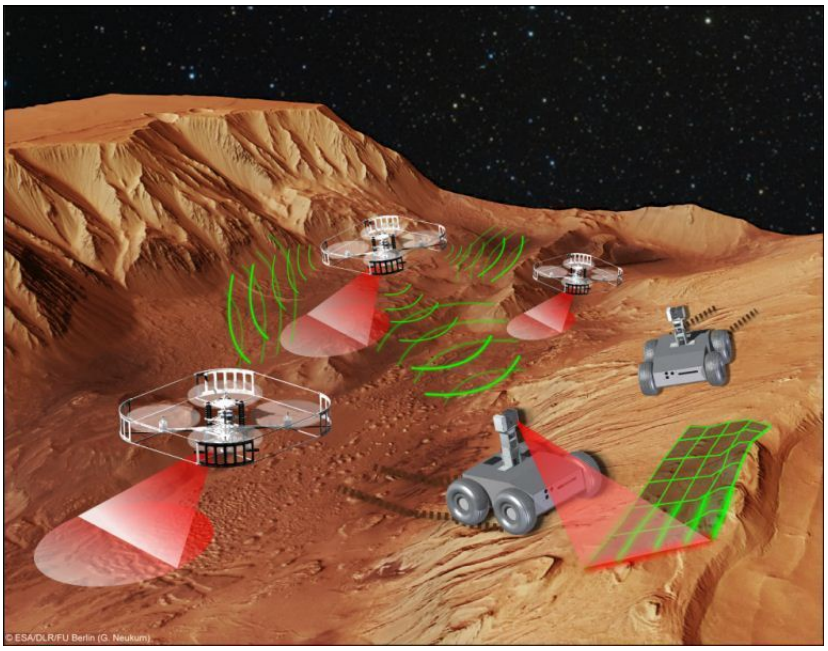

Figure 1: Martian swarm exploration with two types of vehicles

these parameters [1].

The atmospheric pressure of the Mars equals the pressure at a terristrial altitude of about 35 km. Depending on the season the variation of the Martian pressure takes place between 400 and 870 Pa[8]. Like in [2] the barometric pressure can be calculated with the following equation:

$$p(h) = 699 \cdot e^{-0.00009 \cdot h} Pa$$

This equation of the atmospheric model is valid for an altitude up to 7000 m. The consideration of the range of a pressure sensor is important. The Mars requires a scale of 10 Pa instead of 1100 hPa like on Earth. Navigation systems on Earth often utilize the global magnetic field. This method cannot be used on Mars because of weak local magnetic fields in scale of tenth of nT [4].

2 Construction of the Vehicles

The two different vehicles are equipped in the same manner. The functional structure consists of a Sensor Readout Unit, a Main PC Unit and a Remote Control Unit which has a conntection to the Actuating Elements, like in Figure 2.

2.1 UAV

The core component of the UAV is an AscTec Pelican Quadrocopter with an actual take-off weight of 1.9 kg. The UAV is equipped with an AscTec Mastermind Board as Main PC Unit and an AscTec AutoPilot, used as Remote Control Unit. Due to the modular construction of the body of the

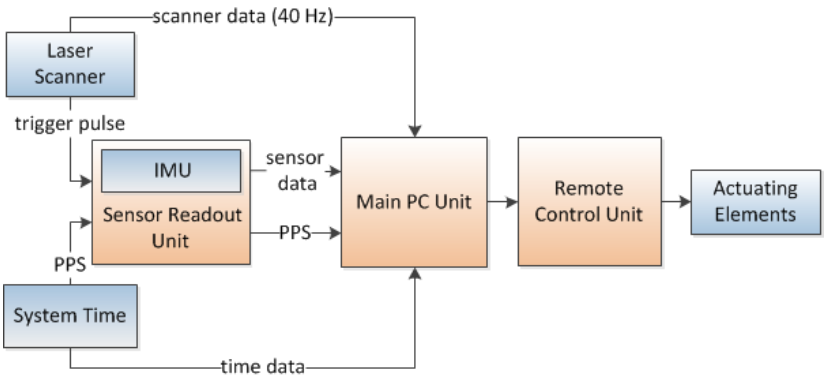

Figure 2: Simplified structure of the UGV and UAV components

Figure 3: Quadrocopter with additional components: laser scanner (red circle), Sensor Readout Unit (green circle)

quadrocopter, additional modules like Sensor Readout Unit and a laser scanner can be mounted. In Figure 3 these additional components are depicted.

2.2 UGV

The UGV constists of a Dr-Robot Jaguar 4x4 with a weight of 20.5 kg and a maximum additional paylod of 30 kg. The chassis is equipped with four wheels, each driven by its own eletrical motor. Therefore skid steering is possible. The body of the rover is designed for outdoor activities and is suitable as experimental vehicle for this project. Most of the electronic components were replaced and new ones were contructed, including the two self-developped boards, named Sensor Readout Unit and Remote Control Unit.

http://www.imavs.org/

http://www.imavs.org/

2.3 Sensor Readout Unit

The Sensor Readout Unit is based on a STM32F4 microcontroller. It is used for time synchronization and carries the IMU. The time stamping and synchronization is very important for matching data of different sensors. The microcontroller has a clock generating timestamps for incoming signals, among other the Inertial Measurment Unit (IMU) data and the trigger of the laser scanner. The Sensor Readout Unit is also able to trigger e.g. a camera, the Main PC or other sensors. For test scenarios on Earth a GPS receiver is connected with this unit. So a Pulse Per Second-signal (PPS) from the GPS receiver can be used for synchronization. Another task of the Sensor Readout Unit is the transfer of collected data to the Main PC Unit, optional using UART or USB.

2.4 Main PC Unit

The two types of vehicle have a different kind of hardware, but the functionality of this Main PC Unit is the same. As input there are the collected data of the Sensor Readout Unit, the laser scanner and if necessary the information of the GPS receiver. Using these information the Main PC Unit calculates control output values. These are forwarded to the Remote Control Unit which drives the motors.

2.5 Sensor Concept

The most important sensors for this concept are the IMU and the laser scanner. The IMU is based on Micro-Electro-Mechanical Systems (MEMS) with high dynamic body-fixed rates and accelerations. In this project the IMU ADIS 16488 from Analog Devices is used. Common sensor errors, like colored noise and temperature dependent drift arise. Therefore a combination with supporting navigation data is essential.

To realize a supporting system all members of the swarm are equipped with a laser scanner. In this case a Hukoyo UTM-30LX(EW) is installed. It is a single-layer laser scanner, which is very small and light weighted. For this reason it is suitable for the integration in UAVs. The technical data of the laser scanner include a maximum range of 30 m, an angular resolution of 0.25°, a detection angle of 270° and an update rate of 40 Hz. With this sensor an environmental detection is only possible in one plane.

Depending on the kind of rover there are two different concepts to obtain a 3D scan. The UGV is equipped with a rotating laser scanner turret. Like in [6] a turret was contructed which is continuously rotating. The laser turret of the UGV moves around a vertical axis. With a rotary encoder the rotation angle is measured and together with IMU data a three-dimensional scan is possible.

On UAVs the laser scanner is mounted vertically, thus a three dimensional scan of the Martian surface is possible but requires a movement of the sensor (see Figure 4). Due to the movement and yawing of the vehicle scan-patterns vary. This change of UAVs position is measured by the IMU, so laser measurements of Martian surface from different perpectives in time and position can be merged.

3 Software Concept

The software concept includes two combined algorithms: the navigation system and a SLAM.

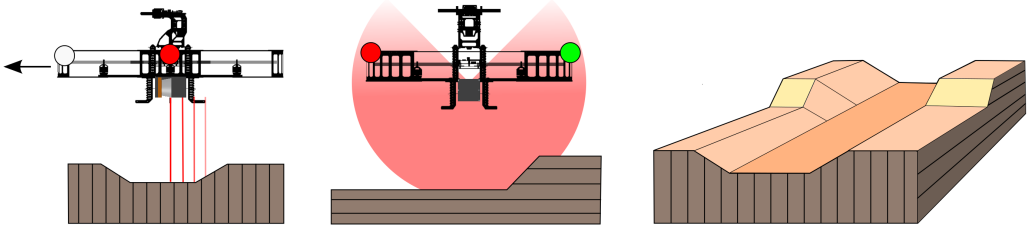

Figure 4: Vertical mounted laser scanner of UAV

3.1 Navigation System

Common navigation systems are using a Global Navigation Satellite System (GNSS) to support the INS, which is based on a IMU. The IMU provides rotational rates and accelerations, but also accumulates errors like colored noise and temperature dependent drift. Since there is no GNSS available on Mars, optical and relative positioning systems have to support the INS to stabilize the positioning. A loosely coupled sensor data fusion of all navigation subsystems is realized. With an Extended Kalman Filter (EKF) corrections for the INS are calculated.

3.2 SLAM Structure

There are a lot of SLAM algorithms in the field of robotic, but established algorithms offer a base for relative positioning to nearby obstacles. Usually the laser scanner is mounted horizontally and has consequently an ideal perspective for indoor scenarios and structured environment. Landscapes, like the surface of the Mars, feature only a small quantity of distinctive objects, which can be scanned horizontally. Thus the sensor is mounted vertically on the UAV and the data processing needs a translation or rotation of the vehicle to get the contour of the surface, as described in 2.5.

In [3] a concept of combining two data sources to one three-dimensional map is mentioned. An orbital a priori map is matched with a rover based scan. The main focus in that work is on long-range localization of the rover for distances about 10 km and more. The idea of a vertical mounted laser scanner on the UAV is used among others in [7]. The method was used to generate a terrain model, but in this case GPS signals are available in scenarios on Earth.

The idea in this work includes three components of data sources: A rough a priori map of Martian surface, environmental data of UGVs from the ground and data of UAVs from above. Surface information in scales of meters are already available, based on recordings of Mars orbiters, and allow an approximate orientation. Each swarm member collects sensor data, including IMU data and time stamped laser scanner data independently. Two different perspectives, which complement one another are generated. The target is to refine the rough Martian surface information with new measurement data detected by the different rovers. Using a communication link between all robots distinctive landmarks can be matched and a collective map is shared.

One requirement of mapping the Martian surface, is a volumetric representation of the space. There are already several methods and libraries of source code. One possibility is the use of OctoMap [5], an effective method of data processing with probabilistic occupancy estimation. The base of this

http://www.imavs.org/

http://www.imavs.org/

Figure 5: The test vehicles

processing are octrees, a hierachical data structure. Each node of the structure represents a cubic volume, which can be recursively subdivided into eight subcubes. Therefore the same map can be recalled in different levels of resolution.

4 Results

After finishing the construction of the test vehicles some test flights have been done (see Figure 5). The scenario was on a local model plane airfield and as test object a van was chosen (Figure 6 left). The goal of the first tests is the evaluation of the ability to merge laser measurements of both vehicle types.

With the UAV the van is scanned from above. A straight flight over the car with an altitude of approximately 5 m is executed, while the ground vehicle was measuring from a fixed point of view nearby the van. The result is shown in the middle of Figure 6. The blue point cloud represents the meausurment of the UAV whereas the red point cloud is obtained from the ground vehicle. The combination of the two scans generates a clear contour of the scanned van. The combined point cloud of UAV and UGV is pictured on the right of Figure 6 visualized with OctoMap.

5 Conclusion

The theoretical exploration of the Mars is the main target of this project. In this work a concept of navigation and mapping in unknown areas is introduced, utilizing a swarm of robots, which are equipped with laser scanners. The two vehicles offer different perspetives of measurement and can complement one another. This kind of environmental detection enables the base for detailed mapping. Due to data fusion of INS and laser scans, drift parameters of the IMU can be estimated and compensated via an Extended Kalman Filter. Therefore a higher precision of positioning is possible.

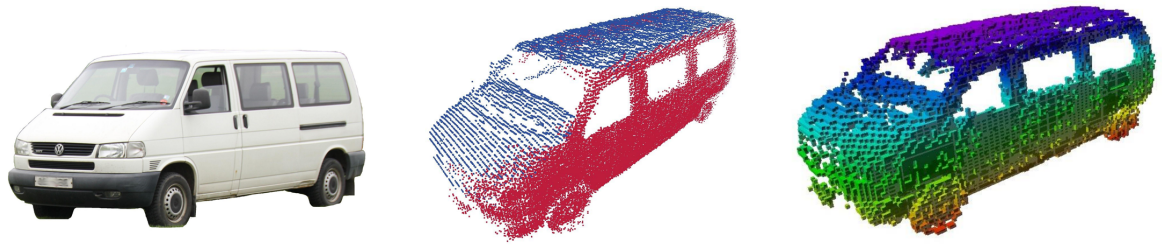

Figure 6: A picture of the scanned Object, the visualization of two point clouds and the tranformation in OctoMap

6 Acknowledgements

This work has been performed within the Valles Marineris Explorer (VaMEx) project, which is partly funded by the Federal Ministry of Economics and Technology administered by DLR Space Agency (FKZ 50NA1212) and the Bavarian Ministry of Economic Affairs, Infrastructure, Transport and Technology administered by IABG GmbH (ZB 20-8-3410.2-12-2012).

References

[1] Raymond E. Arvidson. Mars Gravity Models. *NASA.* `http://geo.pds.nasa.gov/dataserv/gravity_models.htm` *17.05.2013*, 2013.

[2] Tom Benson. Mars Atmosphere Model. *NASA.* `http://www.grc.nasa.gov/WWW/k-12/airplane/atmosmrm.html` *17.05.2013*, 2010.

[3] Patrick Carle and Timothy Barfoot. Global Rover Localization by Matching Lidar and Orbital 3D Maps. 2010.

[4] J. E. P. Connerney, M. H. Acuna, N. F. Ness, G Kletetschka, D. L. Mitchell, R. P. Lin, and H. Reme. Tectonic Implications of Mars Crustal Magnetism. In *Proceedings of the National Academy of Sciences*, volume 102, ISs. 42, pages 14970–14975, 2005.

[5] Armin Hornung, Kai M. Wurm, Maren Bennewitz, Cyrill Stachniss, and Wolfram Burgard. OctoMap: an efficient probabilistic 3D mapping framework based on octrees. *Autonomous Robots*, 34(3):189–206, 2013.

[6] Gregor Michalicek. *Development of a 3D SLAM Exploration System.* PhD thesis, Universität Hamburg, Hamburg, 2010.

[7] Sebastian Thrun, Mark Diel, and Dirk Haehnel. Scan Alignment and 3-D Surface Modeling with a Helicopter Platform. *International Conference on Field and Service Robotics*, 2003.

[8] David R. Williams. Mars Fact Sheet. *NASA.* `http://nssdc.gsfc.nasa.gov/planetary/factsheet/marsfact.html` *17.05.2013*, 2010.

http://www.imavs.org/